| REV. | ECN NO OR DESCRIPTION | REVISED | DATE |
|---|---|---|---|
| F | ECN NO. S061102 | Jacky | 2006.11.22 |
| G | ECN NO.S070616 | Quan-Zhou | 2007.08.23 |
| H | ECN NO.S080720 | Quan-Zhou | 2007.08.19 |

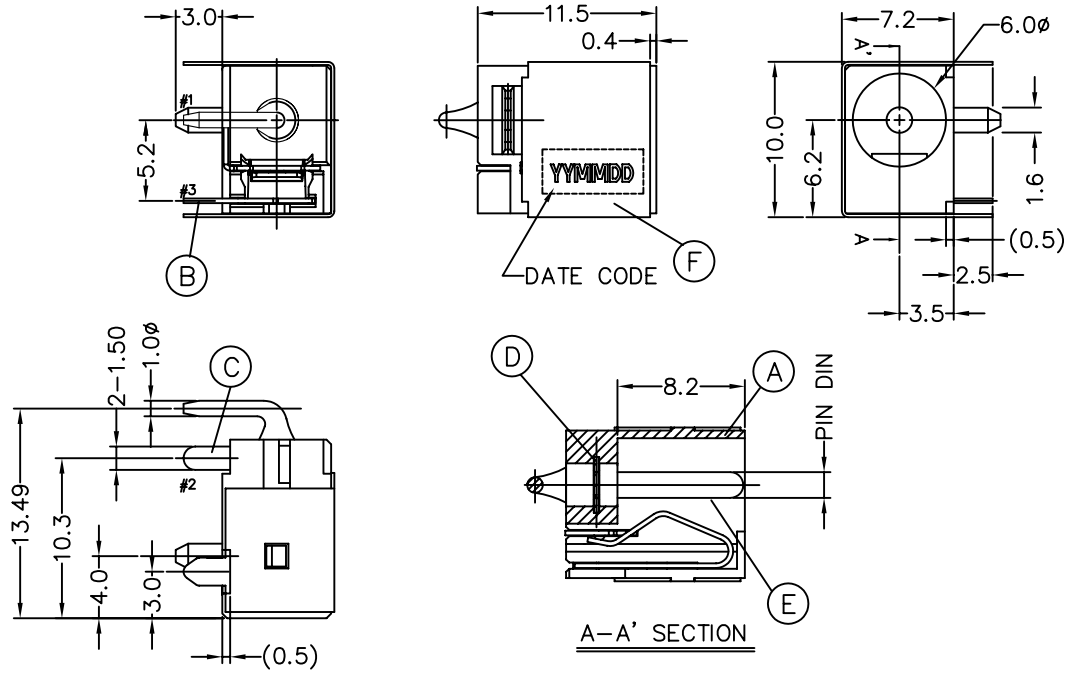


A–A' SECTION

SPECIFICATIONS:

1.RATING: DC 20V 4A
2.INSERTION FORCE: 0.4KG–3.0KG
WITHDRAWAL FORCE: 0.4KG–3.0KG
3.INSULATION RESISTANCE BETWEEN ANY ADJACENT TERMINALS SHALL NOT BE LESS THAN 100 MEGOHMS BY 500 VOLTS MEGGER.
4.JACK SHALL WITHSTAND 250 VOLTS BETWEEN ANY ADJACENT TERMINAL FOR ONE MINUTE.
5.CONTACT RESISTANCE SHALL NOT EXCEED 0.03 OHMS.
6.JACK SHALL WITHSTAND 5,000 CYCLES OF INSERTION AND WITHDRAWAL WITH TESTING PLUG,AND CONTACT RESISTANCE SHALL NOT EXCEED 0.1 OHMS.
7.MEASURING CONDITION:
TEMPERATURE: FROM 5°C TO 35°C.
RELATIVE HUMIDITY: FROM 40% TO 85%
8.ENVIRONMENTAL SPECIFICATIONS:
8.1 HUMIDITY TEST: HUMIDITY 90% TO 95% TEMPERATURE 40°C ± 2°C FOR 96 HOURS.
8.2 HEAT TEST: TEMPERATURE 70°C ± 2°C (HUMIDITY BELOW 50%) FOR 96 HOURS.
8.3 COLD TEST: TEMPERATURE –40°C ± 2°C FOR 96 HOURS.
9.SOLDERABILITY TEST: THE TERMINATION IS AT LEAST 95% COVERED BY A CONTINUOUS NEW SOLDER COATING.
TEST CONDITION: DIP IN MOLTEN SOLDER FOR 5 Sec. AT 245±5°C
(TERMINATION SHALL BE IMMERSED IN FLUX BEFORE TEST)
10.PACKING: TAPE&REEL.
11.SOLDERING CONDITION: WAVE SOLDERING / IR REFLOW.
12.TO CONFORM TO SINGATRON HAZARDOUS SUBSTANCE FREE SPEC.
13.GREEN PRODUCT IDENTIFICATION MARK ON JACK: △
14.GREEN PRODUCT IDENTIFICATION LABEL ON PACKAGING: G.P. PASS
15.FOR LEAD FREE PROCESS.
16.PRINTED DATE CODE "YYMMDD" ON TOP OF CONNECTOR.

SCHEMATIC

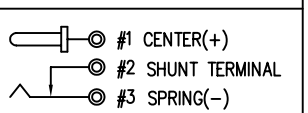


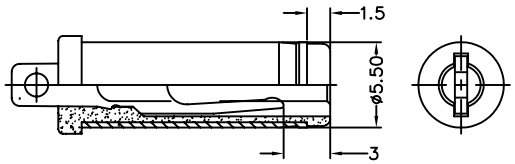


MATING PLUG ø5.50

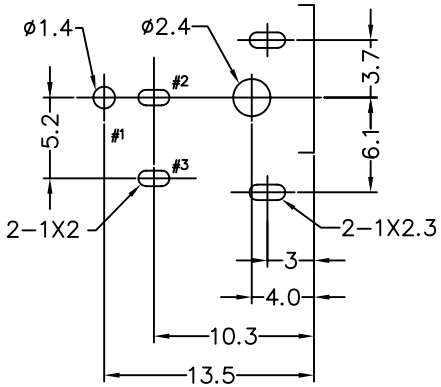


RECOMMENDED P.C.B LAYOUT
TOP VIEW (TOLERANCES:±0.05)

YYMMDD
DD: DAY
MM: MONTH
YY: YEAR

ORDERING CODE:
2DC-S756□200

| PART NO. | PIN DIA. |
|---|---|
| B | $2.5^{+0}_{-0.1}$ø |
| D | $2.0^{+0}_{-0.1}$ø |
| C | $2.35^{+0}_{-0.1}$ø |
| I | $1.65^{+0}_{-0.1}$ø |

| NO | DESCRIPTION | QTY | MATERIAL | PLATING & COLOR |
|---|---|---|---|---|
| F | SHIELDING | 1 | BRASS STRIP 0.2t | Ni 60u" Min |
| E | PIN | 1 | BRASS BAR | Ag 20u" Min |
| D | TERMINAL | 1 | STAINLESS 0.3t | N/A |
| C | SHUNT TERMINAL | 1 | BRASS STRIP 0.3t | Ag 20u" Min |
| B | TIP SPRING | 1 | C5210-EH 0.3t | Ag 20u" Min |
| A | BODY | 1 | HIGH TEMP. THERMOPLASTIC UL 94V-0 | BLACK COLOR |

UNLESS OTHERWISE SPECIFED TOLERANCES

DECIMALS: X :±0.5, X.X :±0.3, X.XX :±0.2
ANGLES: X :±2°, X.X :±1°

Singatron Enterprise Co., Ltd.
信音企業股份有限公司

| | | | |
|---|---|---|---|
| TITLE | DC POWER JACK | | |
| DWN | Quan-Zhou 2008.08.19 | PART NO. 2DC-S756X200 | |
| CHKD | Boye 2008.09.04 | SCALE:3/1 | UNIT: mm |
| APVD | Max 2008.09.04 | SIZE: A3 | SHEET:1 OF 1 REV: H |

CUSTOMER COPY

文件編號 RD-06-043-A