REV.	ECN NO. OR DESCRIPTION	REVISED	DATE
A	產品圖面正式發行/PRODUCT RELEASE	EVEN	4/27-'04
B	ADD KINKED DIMENSIONS	KEN	7/21-'04

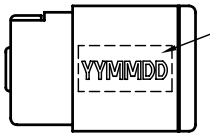

DATE CODE
YY:Year(02)
MM:Month(01~12)
DD:Day(01~31)

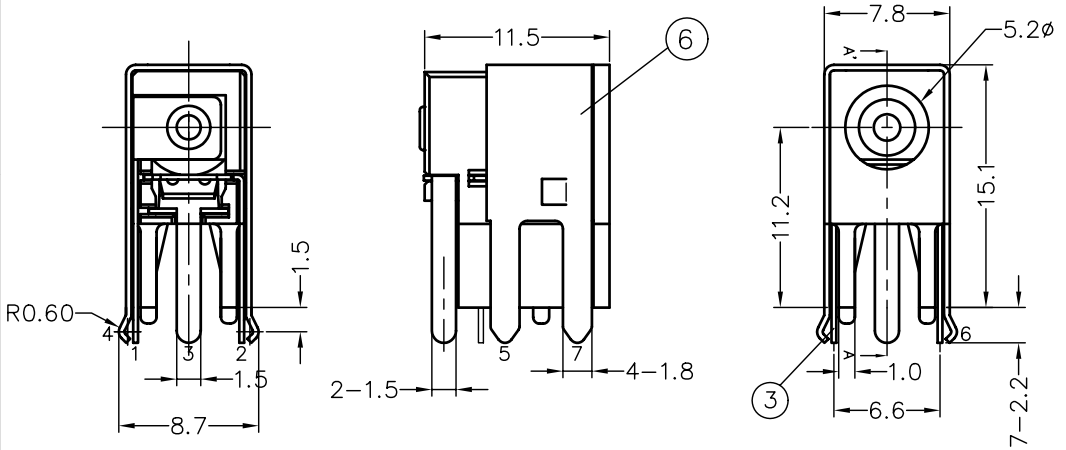

SPECIFICATIONS:
1.RATING: DC 20V 5A
2.INSERTION FORCE: 0.4KG-3.0KG
WITHDRAWAL FORCE: 0.4KG-3.0KG
3.INSULATION RESISTANCE BETWEEN ANY ADJACENT TERMINALS SHALL NOT BE LESS THAN 100 MEGOHMS BY 500 VOLTS MEGGER.
4.JACK SHALL WITHSTAND 250 VOLTS BETWEEN ANY ADJACENT TERMINAL FOR ONE MINUTE.
5.CONTACT RESISTANCE SHALL NOT EXCEED 0.03 OHMS.
6.JACK SHALL WITHSTAND 5,000 CYCLES OF INSERTION AND WITHDRAWAL WITH TESTING PLUG,AND CONTACT RESISTANCE SHALL NOT EXCEED 0.1 OHMS.
7.MEASURING CONDITION:
TEMPERATURE: FROM 5°C TO 35°C.
RELATIVE HUMIDITY: FROM 40% TO 85%
8.ENVIRONMENTAL SPECIFICATIONS:
8.1 HUMIDITY TEST: HUMIDITY 90% TO 95% TEMPERATURE 40°C ± 2°C FOR 96 HOURS.
8.2 HEAT TEST: TEMPERATURE 70°C ± 2°C (HUMIDITY BELOW 50%) FOR 96 HOURS.
8.3 COLD TEST: TEMPERATURE -40°C ± 2°C FOR 96 HOURS.
9.SOLDERABILITY TEST: THE TERMINATION IS AT LEAST 95% COVERED BY A CONTINUOUS NEW SOLDER COATING.
TEST CONDITION: DIP IN MOLTEN SOLDER FOR 5 Sec. AT 245±5°C
(TERMINATION SHALL BE IMMERSED IN FLUX BEFORE TEST)
10.PACKING: TAPE & REEL

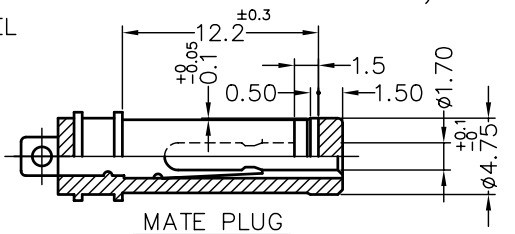

MATE PLUG

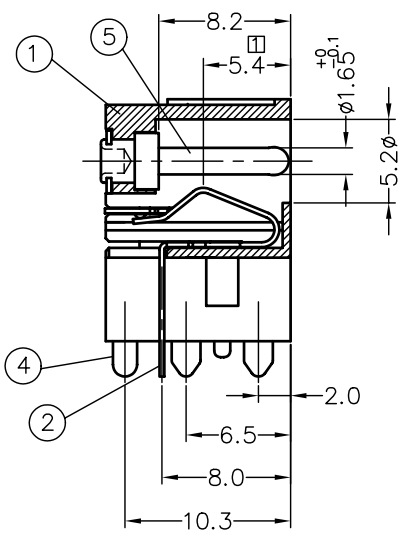

A-A' SECTION

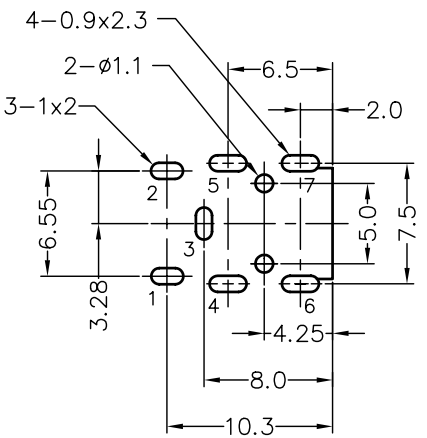

RECOMMENDED P.C.B LAYOUT

SOLDER SIDE
(TOLERANCE: ±0.05)

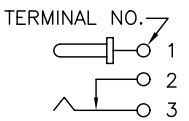

ELECTRICAL CIRCUIT

NO	DESCRIPTION	QTY	MATERIAL	PLATING & COLOR
6	SHIELDING	1	BRASS STRIP 0.35t	TIN PLATING ON SOLDER TAILS, ALL OVER NICKEL PLATING.
5	PIN	1	BRASS BAR	NICKEL PLATING
4	TERMINAL	1	BRASS STRIP 0.3t	SILVER PLATING
3	SHUNT TERMINAL	1	BRASS STRIP 0.3t	SILVER PLATING
2	TIP SPRING	1	COPPER ALLOY 0.3t	SILVER PLATING
1	BODY	1	HIGH TEMP. THERMOPLASTIC UL 94V-0	BLACK COLOR

UNLESS OTHERWISE SPECIFED TOLERANCES

DECIMALS: x :±0.3, X.X :±0.2, X.XX :±0.1
ANGLES: X :±2°, X.X :±1°

Singatron Enterprise Co., Ltd.
信音企業股份有限公司

TITLE	DC POWER JACK		
DWN	BERYL 7/27-'04	PART NO. 2DC-S056I200	
CHKD	KAN 7/27-'04	SCALE:3/1	UNIT: MM
APVD	ANDREW 7/27-'04	SIZE: A3	SHEET:1 OF 1 REV:B

Form: 1

文件編號 RD-06-029-A