REV.	ECN NO OR DESCRIPTION	REVISED	DATE
A	PDR NO:T100525-3A	Sky	2010.09.25

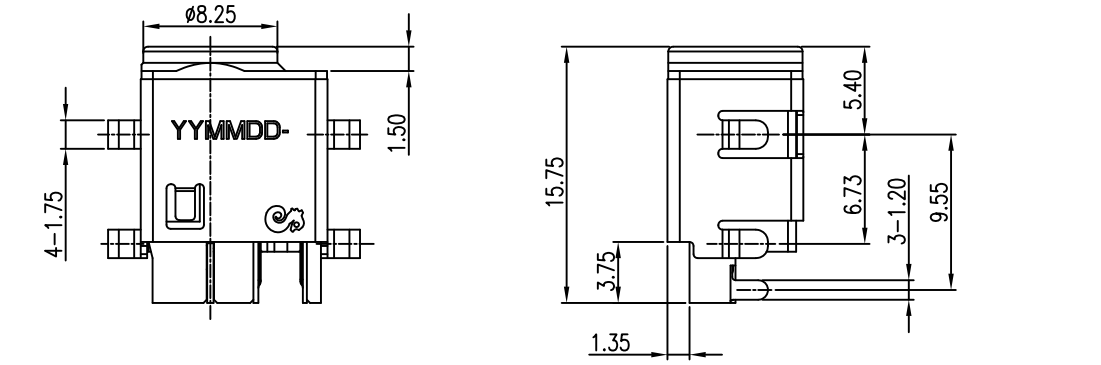

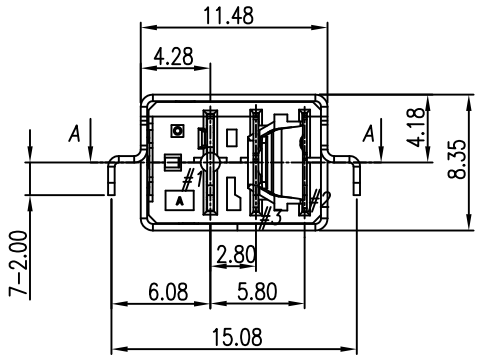

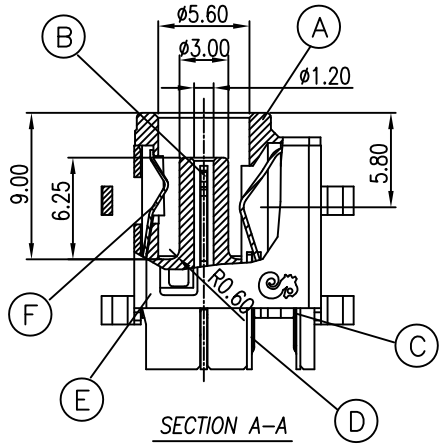

SECTION A-A

SPECIFICATIONS:

1. ELECTRICAL CHARACTERISTICS:
   1-1.RATING: 20V 7A
   1-2. CONTACT RESISTANCE: 30mΩ MAX.(INITIAL)
   1-3. DIELECTRIC WITHSTANDING VOLTAGE: 500V AC FOR ONE MINUTE
   1-4. INSULATION RESISTANCE: 100MΩ MIN. MEASURED BY 500 VDC
2. MECHANICAL CHARACTERISTICS:
   2-1. INSERTION FORCE :3.0 KG Max.
   2-2. WITHDRAWAL FORCE : 1.0~3.0 KG
3. LIFE TEST: 5,000 CYCLES MIN.
4. TO CONFORM TO SINGATRON HAZARDOUS SUBSTANE FREE SPEC.
5. HALOGEN FREE PRODUCT IDENTIFICATION MARK ON JACK:
6. HALOGEN FREE PRODUCT IDENTIFICATION LABEL ON PACKAGING:
7. FOR REFLOW SOLDERING LEAD-FREE PROCESS.
8. PRINTED DATE CODE" YYMMDD " ON TOP OF CONNECTOR.
   - DD: DAY
   - MM: MONTH
   - YY: YEAR

SCHEMATIC

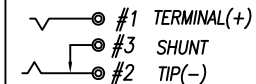

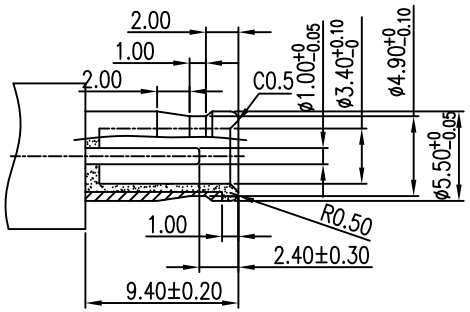

MATING PLUG
TOLERANCE:±0.10

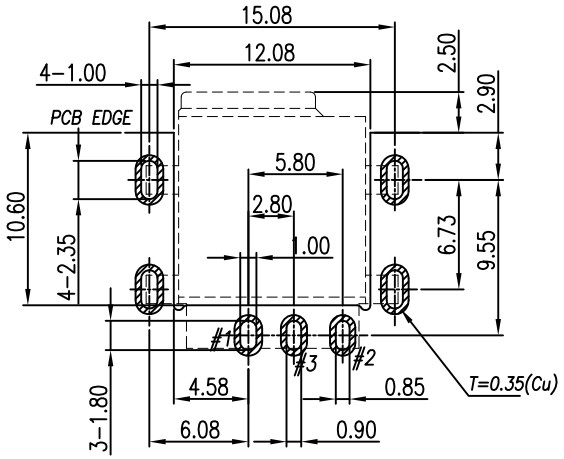

RECOMMEND P.C.B LAYOUT
TOP VIEW(TOLERANCES:±0.05)

F	GROUND	1	STAINESS STEEL; 0.20T	Ni 60u"
E	SHELL	1	BRASS; 0.4T	Ni 60u"
D	SHUNT	1	BRASS; 0.3T	GOLD FLASH ON CONTACT AREA; Sn 120u" ON SOLDER TAIL; ALL OVER Ni 60u"
C	TIP	1	COPPER ALLOY; 0.25T	GOLD FLASH ON CONTACT AREA; Sn 120u" ON SOLDER TAIL; ALL OVER Ni 60u"
B	TERMIANL	1	COPPER ALLOY; 0.4T	GOLD FLASH OVER Ni 60u"
A	BODY	1	HIGH THERMOPLASTIC TEMP. UL 94V-0	BLACK

UNLESS OTHERWISE SPECIFED TOLERANCES

DECIMALS: X :±0.5, X.X :±0.3, X.XX :±0.2

ANGLES: X :±2°, X.X :±1°

Singatron Enterprise Co., Ltd.
信音企業股份有限公司

TITLE	DC JACK			
DWN	Sky	PART NO.2DC3006-001111		
CHKD	Boye	SCALE:4:1	UNIT: mm	
APVD	Quan	SIZE: A3	SHEET:1 OF 1	REV:A

CUSTOMER COPY

文件編號 RD-06-043-A