REV.	ECN NO OR DESCRIPTION	REVISED	DATE
E	ECN NO.S070522	TONY	2007,5,22
F	ECN NO.S070616&S070703	Quan-Zhou	2007.8.23
G	ECN NO.S101125	Swina	2010.12.15

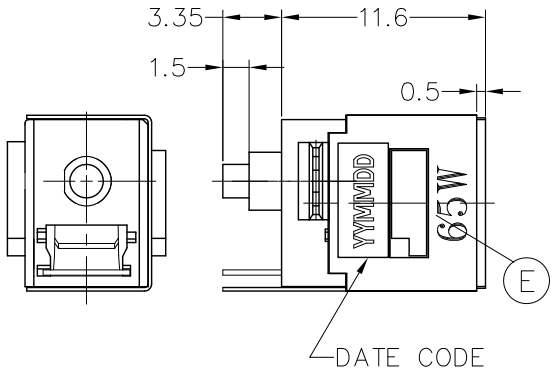

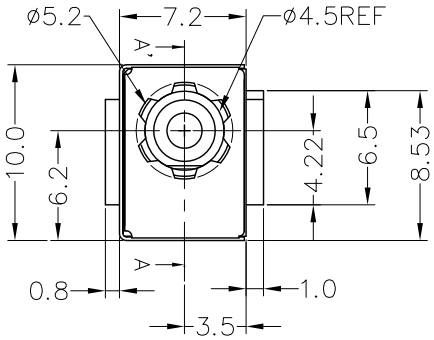

SPECIFICATIONS:

1.ELECTRICAL CHARACTERISTICS:
- 1-1.RATING: DC 20V 7A
- 1-2.CONTACT RESISTANCE : 15mΩMax(INITAL)
- 1-3.DIELECTRIC WITHSTANDING VOLTAGE: 250V FOR ONE MINUTE
- 1-4.INSULATION RESISTANCE: 100mΩ MIN,MEASURED BY 500V DC

2.MECHANICAL CHARACTERISTICS:
- 2-1.INSERTION FORCE: 1.0KG-3.0KG
- 2-2.WITHDRAWAL FORCE: 1.0KG-3.0KG

3.LIFE TEST: 5,000 CYCLES MIN.
4.OTHER GENERAL SPEC TO REFER"DC POWER JACK"SPEC
5.TO CONFORM TO SINGATRON HAZARDOUS SUBSTANCE FREE SPEC
6.GREEN PRODUCT IDENTIFICATION MARK ON JACK: △
7.GREEN PRODUCT IDENTIFICATION LABEL ON PACKAGING: G.P. PASS
8.FOR HAND SOLDERING LEAD FREE PROCESS.
9.PRINTED DATE CODE" YYMMDD" ON TOP OF CONNECTOR.

YYMMDD
- DD: DAY
- MM: MONTH
- YY: YEAR

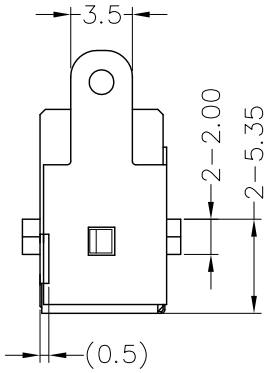

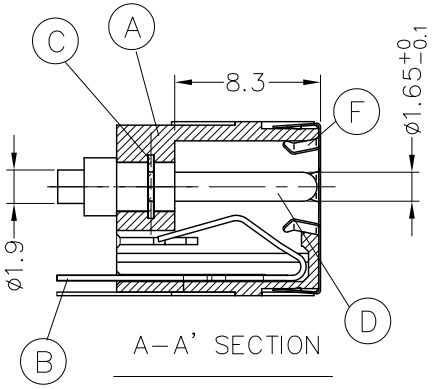

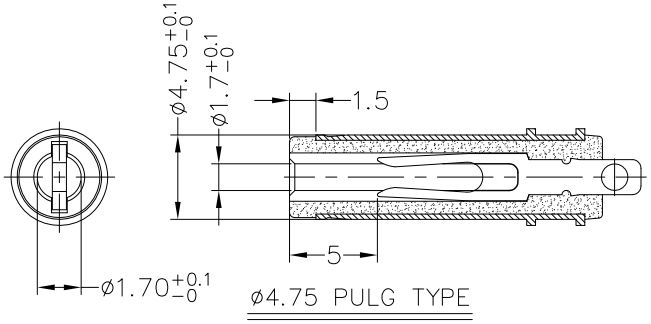

SCHEMATIC

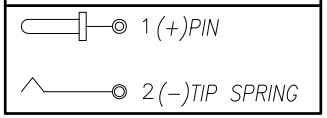

NO	DESCRIPTION	QTY	MATERIAL	PLATING & COLOR
F	GROUND	1	STAINLESS 0.1t	N/A
E	SHIELDING	1	BRASS STRIP 0.2t	Ni60u"Min.
D	PIN	1	BRASS BAR	Ag 20u" Over Ni60u" Min.
C	TERMINAL	1	STAINLESS 0.3t	N/A
B	TIP SPRING	1	COPPER ALLOY 0.3t	Ag 20u" Over Ni60u" Min.
A	BODY	1	THERMOPLASTICUL 94V-0	BLACK COLOR

UNLESS OTHERWISE SPECIFED TOLERANCES

DECIMALS: X :±0.5, X.X :±0.3, X.XX :±0.2

ANGLES: X :±2°, X.X :±1°

Singatron Enterprise Co., Ltd.
信音企業股份有限公司

TITLE	DC POWER JACK		
DWN	Swina 2010.12.15	PART NO.2DC-G756-I03	
CHKD	Lussen	SCALE:4:1	UNIT: mm
APVD	Tony	SIZE: A3	SHEET:1 OF 1 REV: G

CUSTOMER COPY

Form: 2

文件編號 RD-06-043-A