REV.	ECN NO OR DESCRIPTION	REVISED	DATE
A	PRODUCT RELEASE	EVEN	8/30-'04

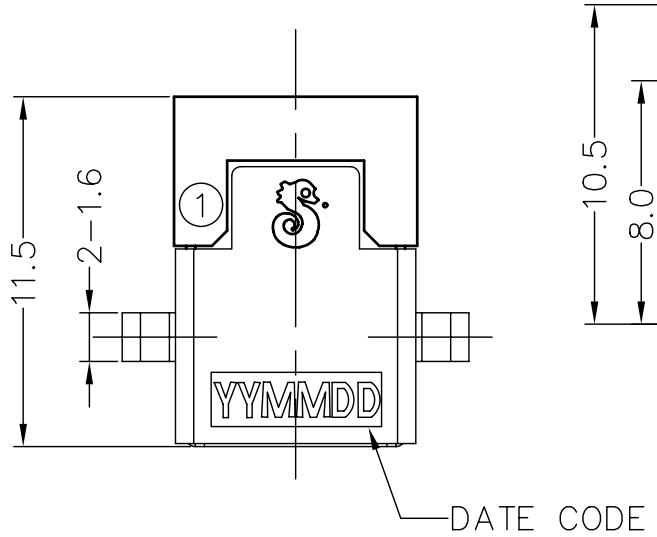

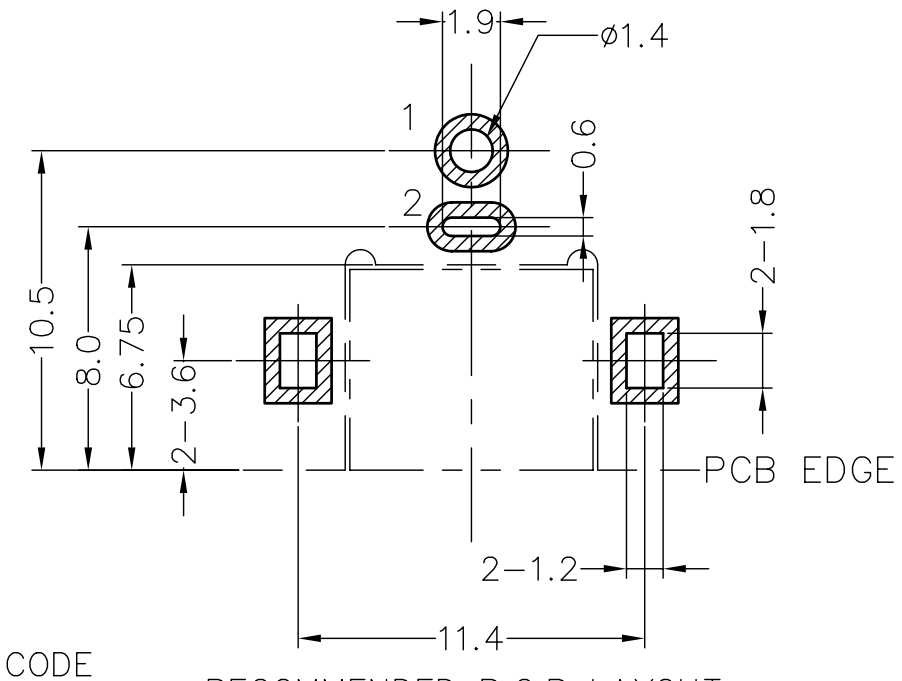

RECOMMENDED P.C.B LAYOUT

TOP VIEW Tolorance: ±0.05

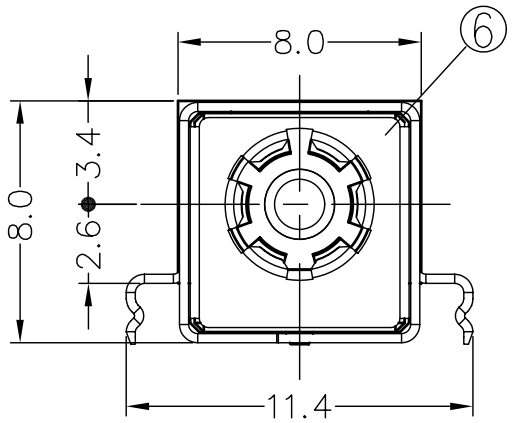

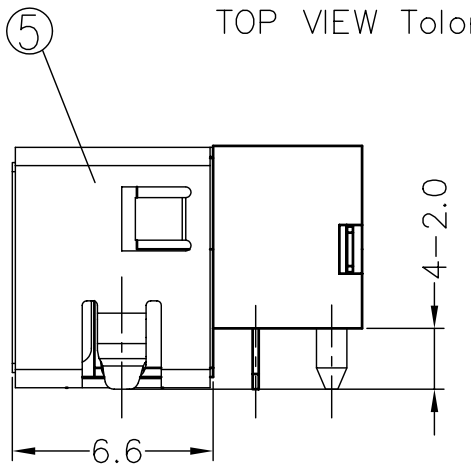

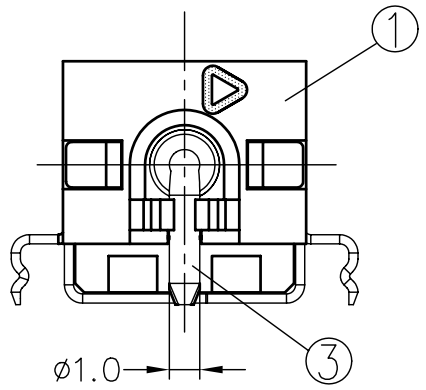

SPECIFICATIONS:

1. RATING: DC 20V 7A
2. INSERTION FORCE: 0.4Kg~3.0Kg
   WITHDRAWAL FORCE: 0.4Kg~3.0Kg
3. INSULATION RESISTANCE BETWEEN ANY ADJACENT TERMINALS SHALL NOT BE LESS THAN 100 MEGOHMS BY 500 VOLTS MEGGER.
4. JACK SHALL WITHSTAND 250 VOLTS BETWEEN ANY ADJACENT TERMINAL FOR ONE MINUTE.
5. CONTACT RESISTANCE SHALL NOT EXCEED 30mΩ
6. JACK SHALL WITHSTAND 5,000 CYCLES OF INSERTION AND WITHDRAWAL WITH TESTING PLUG, AND CONTACT RESISTANCE SHALL NOT EXCEED 30mΩ
7. MEASURING CONDITION:
   TEMPERATURE: FROM 5°C TO 35°C.
   RELATIVE HUMIDITY: FROM 40% TO 85%.
8. ENVIRONMENTAL SPECIFICATIONS:
   8.1 HUMIDITY TEST: HUMIDITY 90% TO 95% TEMPERATURE 40°C ±2°C FOR 96 HOURS.
   8.2 HEAT TEST: TEMPERATURE 70°C ± 2°C (HUMIDITY BELOW 50%) FOR 96 HOURS.
   8.3 COLD TEST: TEMPERATURE −40°C ± 2°C FOR 96 HOURS.
9. PACKING: TAPE & REEL
10. PRINTED DATE CODE "YYMMDD" ON TOP OF CONNECTOR.

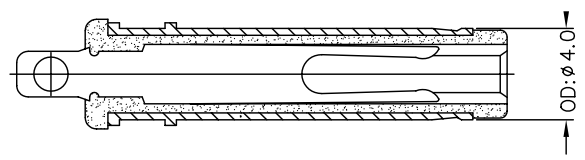

MATING PLUG

YYMMDD
- DD: DAY
- MM: MONTH
- YY: YEAR

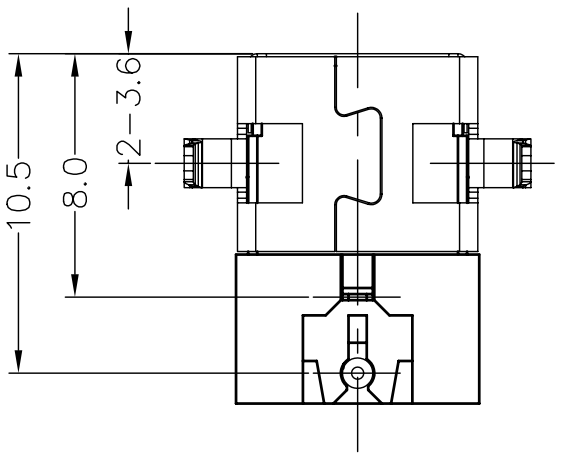

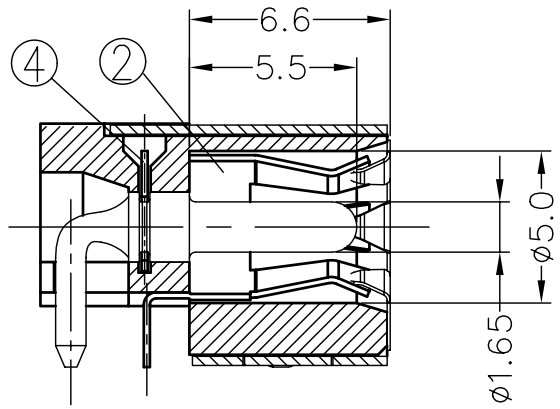

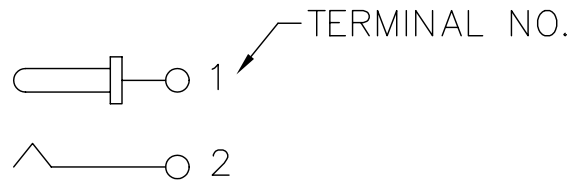

ELECTRICAL CIRCUIT

NO	DESCRIPTION	QTY	MATERIAL	PLATING & COLOR
6	GROUND	1	SUS 304 0.1t	
5	SHELL	1	SPCC-SD 0.3t	TIN ALLOY PLATING
4	TERMINAL	1	SUS 301 0.3t	
3	PIN	1	BRASS BAR	SILVER PLATING
2	SPRING	1	COPPER ALLOY 0.2t	TIN ALLOY PLATING
1	BODY	1	HIGH TEMP. THERMOPLASTIC PA-9T UL 94V-0	BLACK COLOR

UNLESS OTHERWISE SPECIFED TOLERANCES

DECIMALS: X :±0.3, X.X :±0.2, X.XX :±0.1

ANGLES: X :±2°, X.X :±1°

Singatron Enterprise Co., Ltd.
信音企業股份有限公司

TITLE	DC POWER JACK			
DWN	EVEN 8/30-'04	PART NO. 2DC-G723I200		
CHKD	KAN 8/30-'04	SCALE:4/1	UNIT: MM	
APVD	ANDREW 8/31-'04	SIZE: A3	SHEET:1 OF 1	REV: A

Form: 1

文件編號 RD-06-029-A