REV.	ECN NO OR DESCRIPTION	REVISED	DATE
A	PDR No: T080514-1A	Swina	2008.06.23
B	ECN NO.S081005	Boye	2008.11.24

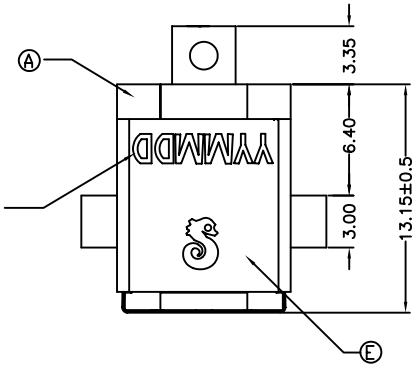

DATE CODE
YY :Year
MM :Month
DD :Day

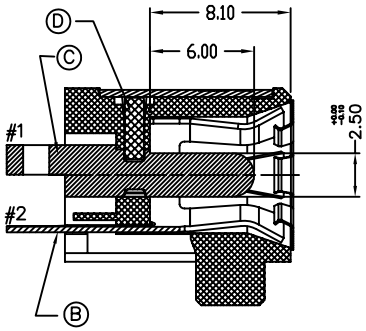

SECTION A'-A'

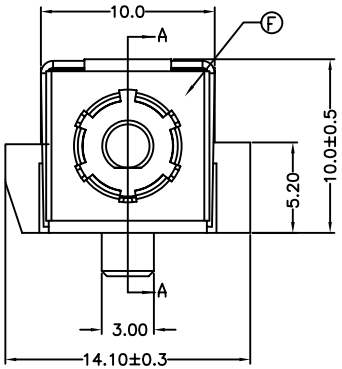

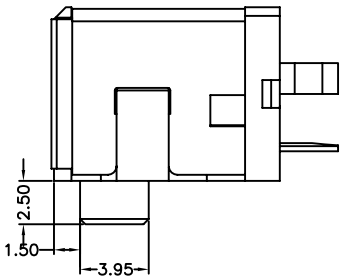

SPECIFICATIONS:

1.INSERTION FORCE: 3.0KG MAX.
WITHDRAWAL FORCE: 1.0KG-3.0KG
2.INSULATION RESISTANCE BETWEEN ANY ADJACENT TERMINALS SHALL NOT BE LESS THAN 100 MEGOHMS BY 500 VOLTS MEGGER.
3.JACK SHALL WITHSTAND 250 VOLTS BETWEEN ANY ADJACENT TERMINAL FOR ONE MINUTE.
4.CONTACT RESISTANCE SHALL NOT EXCEED 30mΩ
5.JACK SHALL WITHSTAND 5,000 CYCLES OF INSERTION AND WITHDRAWAL WITH TESTING PLUG,AND CONTACT RESISTANCE SHALL NOT EXCEED 50mΩ
6.MEASURING CONDITION:
TEMPERATURE: FROM 5°C TO 35°C.
RELATIVE HUMIDITY: FROM 40% TO 85%.
7.ENVIRONMENTAL SPECIFICATIONS:
7.1 HUMIDITY TEST: HUMIDITY 90% TO 95% TEMPERATURE 40°C ±2°C FOR 96 HOURS.
7.2 HEAT TEST: TEMPERATURE 70°C ± 2°C (HUMIDITY BELOW 50%) FOR 96 HOURS.
7.3 COLD TEST: TEMPERATURE -40°C ± 2°C FOR 96 HOURS.
8.TO CONFORM TO SINGATRON HAZARDOUS SUBSTANCE FREE SPEC
9.HALOGEN FREE PRODUCT INDENTIFICATION MARK ON JACK: O
10.HALOGEN FREE PRODUCT INDENTIFICATION LOGO ON THE PACKAGING
11.FOR LEAD FREE PROCESS.

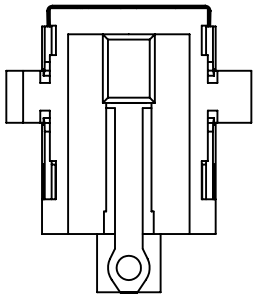

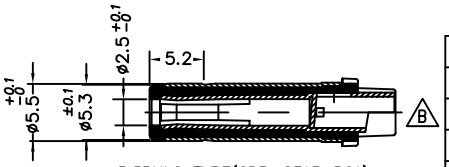

ø5.5PULG TYPE(2DP-G313-B01)
1.RATING: DC 20V 10A 43uF

NO	DESCRIPTION	QTY	MATERIAL	PLATING & COLOR
F	GROUND	1	STAINLESS 0.15t	N/A
E	SHIELDING	1	SPCC-SD 0.4t	Ni 60u" Over Cu80u"
D	STOPPER	1	THERMOPLASTIC UL94V-0	BLACK
C	PIN	1	BRASS BAR	Ag20u" Over Ni 50u"
B	SPRING	1	COPPER ALLOY 0.3t	Sn 60u"Over Ni 60u"
A	BODY	1	THERMOPLASTIC UL94V-0	BLACK

SCHEMATIC

#1(+) CENTER PIN
#2(-) SPRING

UNLESS OTHERWISE SPECIFED TOLERANCES

DECIMALS: X :±0.5 X.X :±0.3 X.XX :±0.2
ANGLES: X :±2° X.X:±1°

Singatron Enterprise Co., Ltd.
信音企業股份有限公司

TITLE	DC POWER JACK		
DWN	Boye 2008.11.24	PART NO.2DC-G233-B13	
CHKD	Quan-Zhou 2008.11.28	SCALE:4:1	UNIT: mm
APVD	Max	SIZE: A3	SHEET:1OF1	REV: B

CUSTOMER COPY

文件編號:RD-06-043-A