REV.	ECN NO OR DESCRIPTION	REVISED	DATE
J	ECN NO.C100198 CHANGE LAYOUT	BILL	2010.05.28
K	ECN NO.:C100044	REX	2010.07.27
L	ECN NO.C100359 DESIGN CHANGE	BILLY	2010.11.03

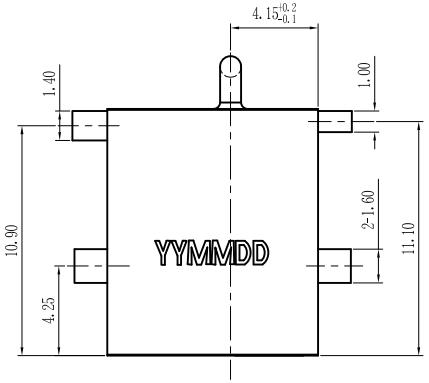

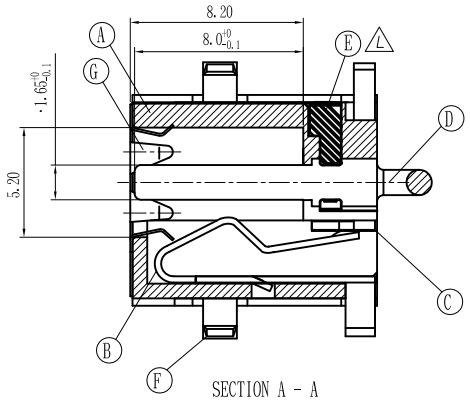

SECTION A - A

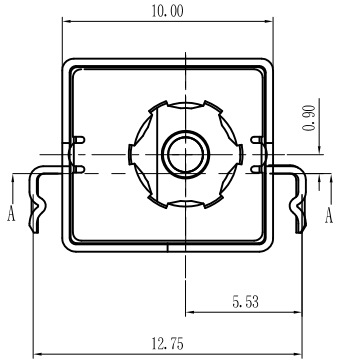

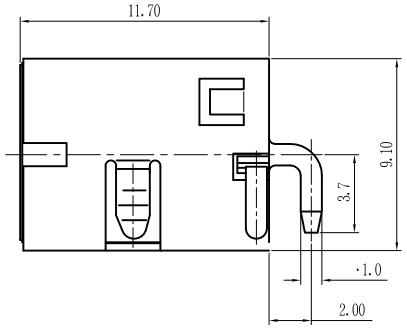

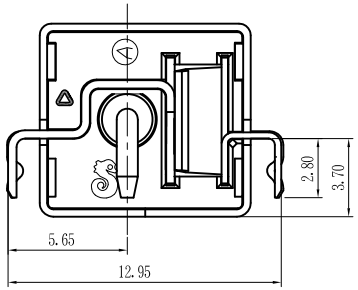

SPECIFICATIONS:

1. ELECTRICAL CHARACTERISTICS:
   1-1. RATING: DC 20V 5.5A
   1-2. CONTACT RESISTANCE: 30m MAX.(INITIAL) 60m MAX.(FINAL)
   1-3. DIELECTRIC WITHSTANDING VOLTAGE: 500V AC FOR ONE MINUTE.
   1-4. INSULATION RESISTANCE: 100M MIN. MEASURED BY 500 VDC
2. MECHANICAL CHARACTERISTICS:
   2-1. INSERTION FORCE : 0.5~2.0 KGF
   2-2. WITHDRAWAL FORCE : 0.4~2.0 KGF
3. LIFE TEST: 5,000 CYCLES MIN.
4. MEASURING CONDITION:
   TEMPERATURE: FROM 5° C TO 35° C.
   RELATIVE HUMIDITY: FROM 40% TO 85%.
5. TO CONFORM TO THE SINGATRON HAZARDOUS SUBSTANCE FREE SPEC.
6. GREEN PRODUCT IDENTIFICATION MARK ON JACK:
7. GREEN PRODUCT IDENTIFICATION LABEL ON PACKAGING: **G.P. PASS**
8. FOR LEAD-FREE PROCESS.
9. D/C DESCRIPTION:

YYMMDD
- DAY
- MONTH
- YEAR

SCHEMATIC

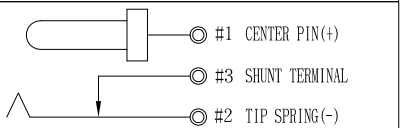

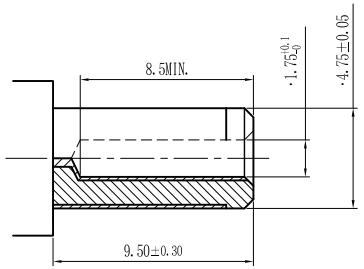

MATE PLUG

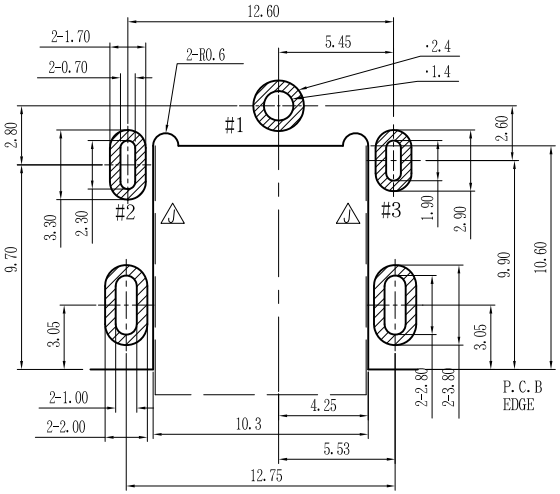

RECOMMENDED P.C.B LAYOUT

TOP VIEW (TOLERANCES:±0.05)

NO	DESCRIPTION	QTY	MATERIAL	PLATING & COLOR
G	GROUND	1	STEEL 0.1t	N/A
F	SHIELD	1	COPPER ALLOY 0.35t	Ni 60u" MIN.(SOLDERABILITY)
E	TERMINAL	1	HIGH TEMP. THERMPLASTIC	BLACK COLOR
D	CONTACT PIN	1	COPPER ALLOY ·1.65	Ag20u "MIN,Ni20u"MIN
C	SHUNT TERMINAL	1	COPPER ALLOY 0.4t	Ag20u "MIN,Ni20u"MIN
B	TIP SPRING	1	COPPER ALLOY 0.3t	Ag20u "MIN,Ni20u"MIN
A	BODY	1	HIGH TEMP. THERMPLASTIC UL94V-0	BLACK COLOR

UNLESS OTHERWISE SPECIFED TOLERANCES

DECIMALS: X :±0.5 / X.X :±0.3 / X.XX :±0.2

ANGLES: X :±2° / X.X :±1°

Singatron Enterprise Co., Ltd.
信音企業股份有限公司

TITLE	DC POWER JACK		
DWN	Billy 10.11.10	PART NO. 2DC-G128I200	
CHKD	Zff 10.11.10	SCALE 4:1	UNIT: mm
APVD	Lion 10.11.10	SIZE: A3	SHEET: 1OF1
			REV: L

CUSTOMER COPY

文件編號 ED-06-043-A