REV.	ECN NO OR DESCRIPTION	REVISED	DATE
E	ECN NO: T080154 Change drawing Error	EVEN	2008.08.04
F	ECN NO: Update drawing	JASON	2008.08.20

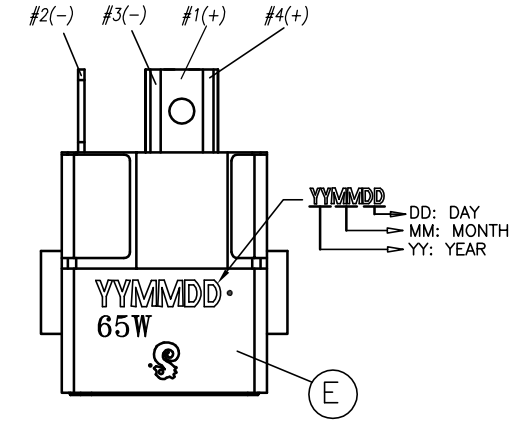

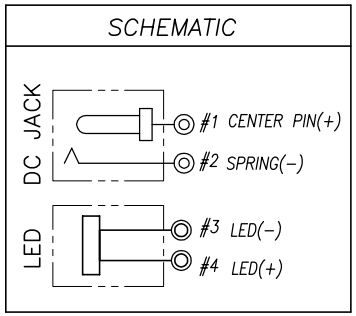

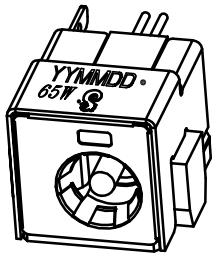

F

SPECIFICATIONS:

1. ELECTRICAL CHARACTERISTICS:
   1−1. RATING: 19V 5A
   1−2. CONTACT RESISTANCE: 30mΩ MAX.(INITIAL)
   1−3. DIELECTRIC WITHSTANDING VOLTAGE: 250V DC FOR ONE MINUTE
   1−4. INSULATION RESISTANCE: 100MΩ MIN. MEASURED BY 500 VDC
2. MECHANICAL CHARACTERISTICS:
   2−1. INSERTION FORCE : 3.0 KGF Max.
   2−2. WITHDRAWAL FORCE : 0.4 KGF Min.
3. LIFE TEST: 5,000 CYCLES MIN.
4. OTHER GENERAL SPEC. TO REFER "2DC−G062−I01/I02 SPEC".
5. TO CONFORM TO SINGATRON HAZARDOUS SUBSTANCE FREE SPEC.
6. GREEN PRODUCT IDENTIFICATION MARK ON JACK: ▲
7. GREEN PRODUCT IDENTIFICATION LABEL ON PACKAGING: **G.P. PASS**
8. FOR HAND SOLDERING LEAD−FREE PROCESS.
9. PACKAGING : BAG

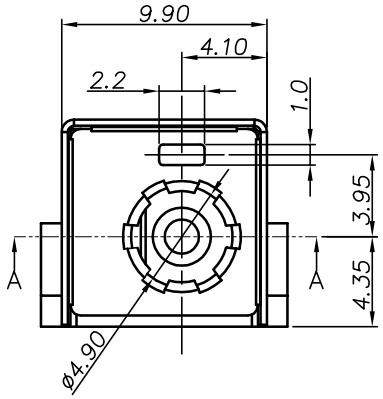

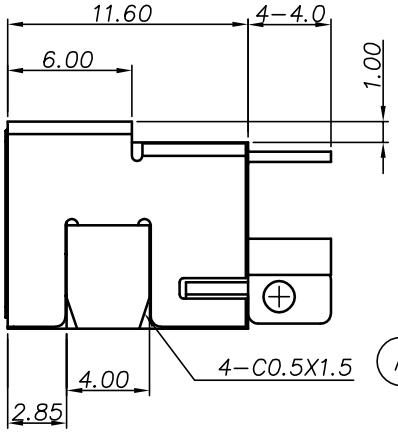

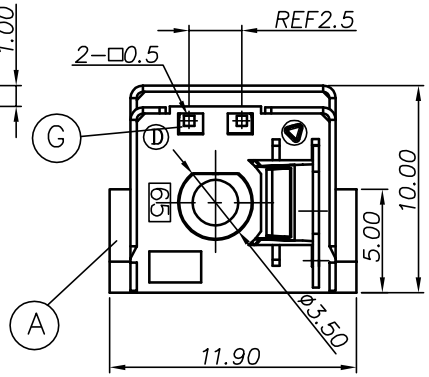

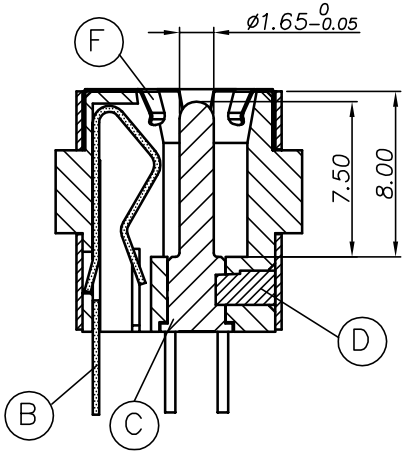

F A−A SECTION
SCALE 4:1

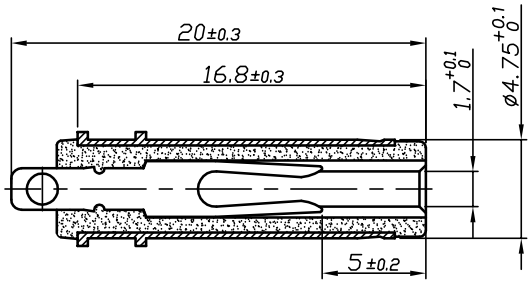

F MATING PLUG: ø4.75 PLUG 65W TYPE

NO	DESCRIPTION	QTY	MATERIAL	PLATING & COLOR
G	LED	1	InGaN	BLUE LIGHT
F	GROUND	1	SUS 301 0.1t	
E	SHELL	1	COPPER ALLOY 0.3t	Ni 60u" Min
D	STOPPER	1	PBT UL 94V−0	BLACK COLOR
C	PIN	1	BRASS BAR	Ag 20u" Min
B	SPRING	1	COPPER ALLOY 0.3t	Ag 20u" Min
A	BODY	1	HIGH TEMP. THERMOPLASTIC UL 94V−0	BLACK COLOR

UNLESS OTHERWISE SPECIFED TOLERANCES

DECIMALS: X :±0.5, X.X :±0.3, X.XX :±0.2

ANGLES: X :±2°, X.X :±1°

Singatron Enterprise Co., Ltd.
信音企業股份有限公司

TITLE	DC POWER JACK		
DWN	JASON 2008.8.26	PART NO.2DC−G062−I02	
CHKD	ANGELA2008.8.26	SCALE 4:1	UNIT: mm
APVD	JACK−KUO2008.8.26	SIZE: A3	SHEET:1 OF 1 REV: F

CUSTOMER COPY

文件編號 RD−06−043−A