REV.	ECN NO OR DESCRIPTION	REVISED	DATE
F	ECN NO.T070268	EVEN	2007.8.23
G	ECN NO.S080515	Swina	2008.05.13
H	ECN NO.S090203 H	LILI	2009.04.08

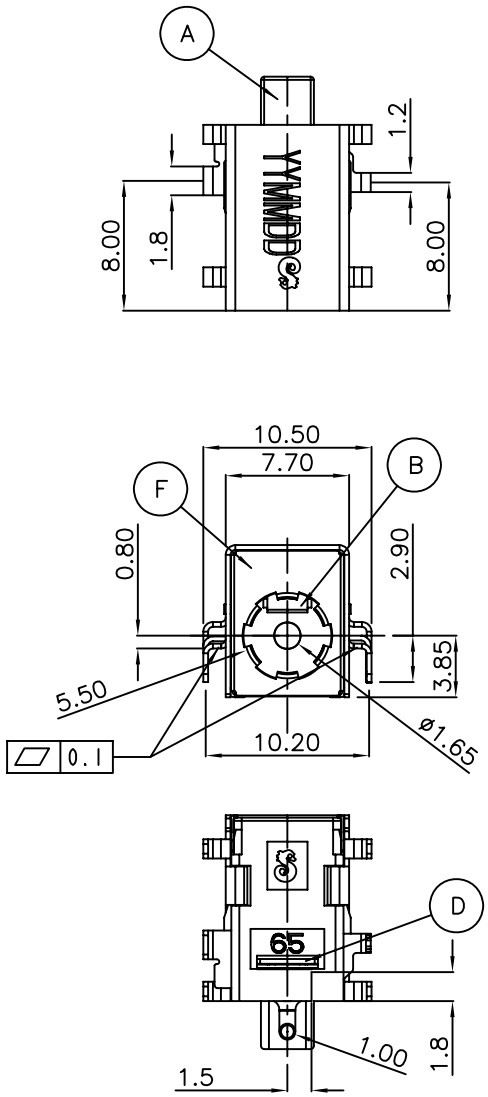

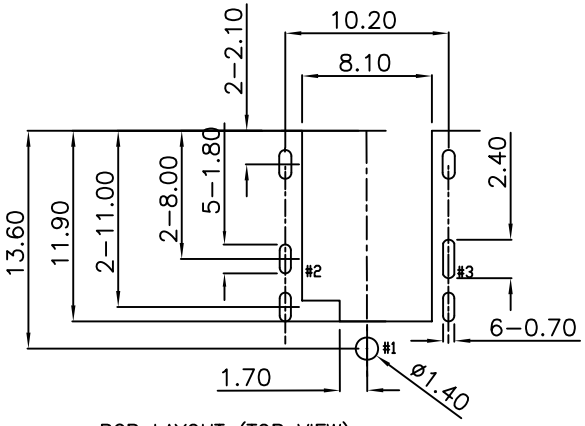

PCB LAYOUT (TOP VIEW)
DIMENSION TOLERANCE: ±0.05

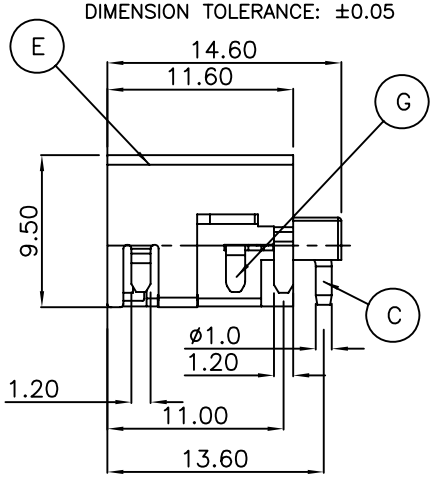

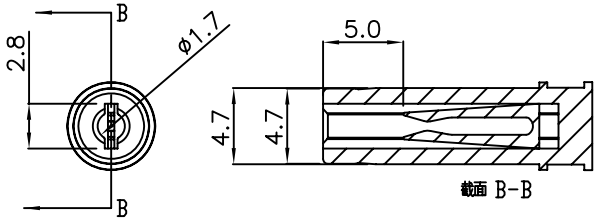

65W MATING PLUG (FORK TYPE)

SPECIFICATIONS:

1. RATING: DC 20V 5.5 A
2. INSERTION FORCE: 0.4KG-3KG
   WITHDRAWAL FORCE: 0.4KG-3KG
3. INSULATION RESISTANCE BETWEEN ANY ADJACENT TERMINALS SHALL NOT BE LESS THAN 100 MEGOHMS BY 500 VOLTS MEGGER.
4. JACK SHALL WITHSTAND 250 VOLTS BETWEEN ANY ADJACENT TERMINAL FOR ONE MINUTE.
5. CONTACT RESISTANCE SHALL NOT EXCEED 0.03 OHMS.
6. JACK SHALL WITHSTAND 5,000 CYCLES OF INSERTION AND WITHDRAWAL WITH TESTING PLUG,AND CON TACT RESISTANCE SHALL NOT EXCEED 0.1 OHMS.
7. MEASURING CONDITION:
   TEMPERATURE: FROM 5°C TO 35°C.
   RELATIVE HUMIDITY: FROM 40% TO 85%.
8. ENVIRONMENTAL SPECIFICATIONS:
   8.1 HUMIDITY TEST: HUMIDITY 90% TO 95% TEMPERATURE 40°C ± 2°C FOR 96 HOURS.
   8.2 HEAT TEST: TEMPERATURE 70°C ± 2°C (HUMIDITY BELOW 50%) FOR 96 HOURS.
   8.3 COLD TEST: TEMPERATURE −40°C ± 2°C FOR 96 HOURS.
9. PACKAGING: TAPE & REEL
10. PRINTED DATE CODE"YYMMDD"ON TOP OF CONNECTOR.
11. SOLDER HEAT RESISTANCE: 260°C 10 SECS.
12. TO CONFORM TO SINGATRON HAZARDOUS SUBSTANCE FREE SPEC.
13. GREEN PRODUCT IDENTIFICATION MARK ON JACK: △
14. GREEN PRODUCT IDENTIFICATION LABEL ON PACKAGING: G.P. PASS
15. FOR REFLOW SOLDERING LEAD-FREE PROCESS.

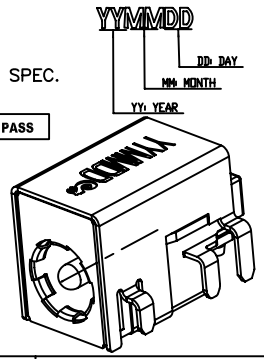

NO	DESCRIPTION	QTY	MATERIAL	PLATING & COLOR
G	SHUNT TERMINAL	1	BRASS T=0.3mm	GOLD FLASH OVER Ni 60u"Min
F	GROUND	1	STAINLESS T=0.15mm	N/A
E	SHELL	1	BRASS T=0.3mm	Sn 60u" OVER Ni 60u"Min
D	TERMINAL	1	STAINLESS T=0.3mm	N/A
C	PIN	1	BRASS BAR 1.65ø	GOLD FLASH OVER Ni 60u"Min
B	TIP	1	COPPER ALLOYT=0.3mm	GOLD FLASH OVER Ni 60u"Min
A	BODY	1	HIGH TEMP.THERMOPLASTIC UL94V-0	BLACK

SCHEMATIC

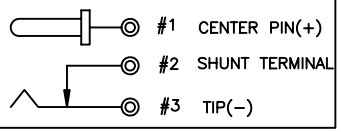

H

UNLESS OTHERWISE SPECIFED TOLERANCES

DECIMALS: X :±0.5, X.X :±0.3, X.XX :±0.2

ANGLES: X :±2°, X.X :±1°

Singatron Enterprise Co., Ltd.
信音企業股份有限公司

TITLE	DC POWER JACK (65W)		
DWN	LILI 2009.04.08	PART NO. 2DC-G052-I01	
CHKD	Boye 2009.04.08	SCALE: 3:1	UNIT: mm
APVD	Max 2009.04.08	SIZE: A3	SHEET: 1 OF 1	REV: H

CUSTOMER COPY