REV.	ECN NO OR DESCRIPTION	REVISED	DATE
D	ECN NO.C100198 CHANGE LAYOUT	BILL	2010.06.02
E	ECN NO.: C100044	REX	2010.07.27
F	ECN NO: C100391MODIFY DIMENSION	LONGJIANG	2010.09.21

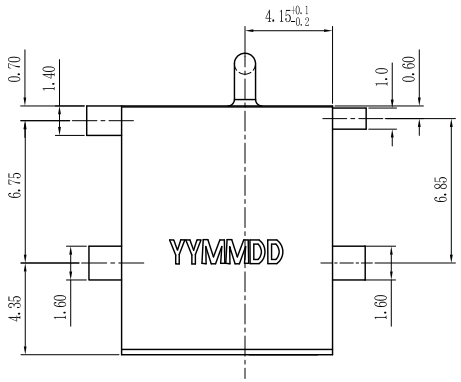

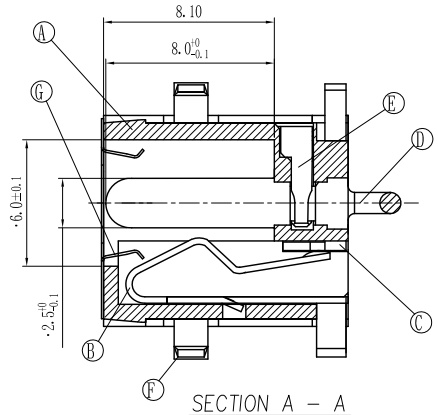

SECTION A – A

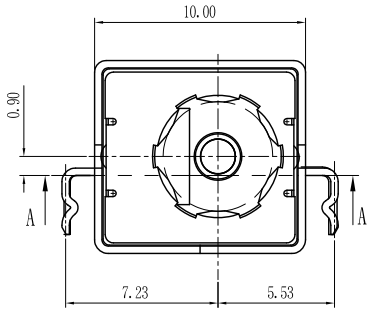

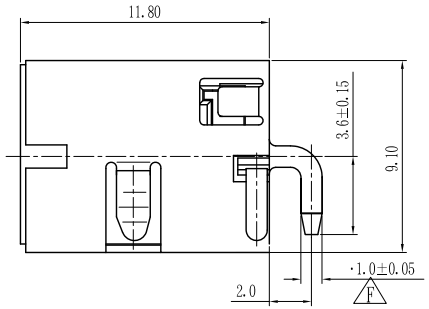

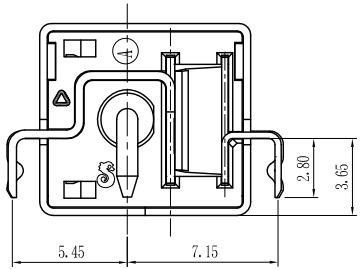

SPECIFICATIONS:
1.RATING: DC 20V 7A
2.INSERTION FORCE: 3.0Kg MAX.
WITHDRAWAL FORCE: 1.0Kg~3.0Kg
3.INSULATION RESISTANCE BETWEEN ANY ADJACENT TERMINALS SHALL NOT BE LESS THAN 100 MEGOHMS BY 500V DC.
4.JACK SHALL WITHSTAND 500 VOLTS BETWEEN ANY ADJACENT TERMINAL FOR ONE MINUTE.
5.CONTACT RESISTANCE SHALL NOT EXCEED 0.03 OHMS.
6.JACK SHALL WITHSTAND 5,000 CYCLES OF INSERTION AND WITHDRAWAL WITH TESTING PLUG, AND CONTACT RESISTANCE SHALL NOT EXCEED 0.06 OHMS.
7.MEASURING CONDITION:
TEMPERATURE: FROM 5°C TO 35°C.
RELATIVE HUMIDITY: FROM 40% TO 85%.
8.TO CONFORM TO SINGATRON HAZARDOUS SUBSTANCE FREE SPEC.
9.GREEN PRODUCT IDENTIFICATION LABEL ON PACKAGING: **G.P. PASS**
10. FOR 260°C 10SEC. WAVE SOLDERING LEAD-FREE PRODUCT.
11.PRINTED DATE CODE"YYMMDD"ON TOP OF CONNECTOR.
12.PACKAGING: TAPE&REEL

YY MM DD
DD: DAY
MM: MONTH
YY: YEAR

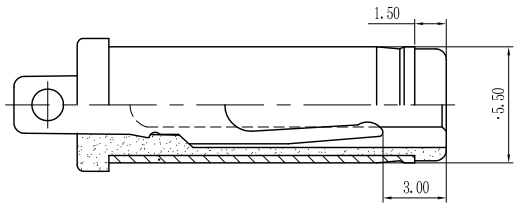

MATE PLUG ·5.50

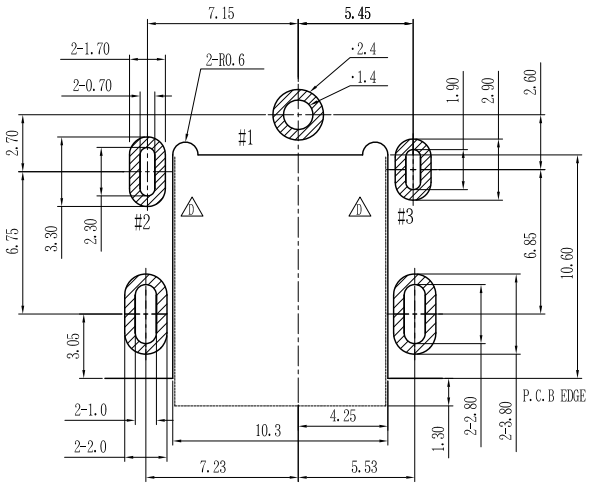

RECOMMENDED P.C.B LAYOUT

TOP VIEW (TOLERANCES: ±0.05)

SCHEMATIC

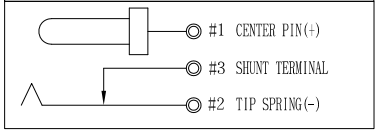

NO	DESCRIPTION	QTY	MATERIAL	PLATING & COLOR
G	GROUND	1	SUS 0.1t	N/A
F	SHIELD	1	BRASS 0.35t	Ni 60u"Min(N4)
E	TERMINAL	1	HIGHT TEMP.THERMOPLASTIC UL94V-0	BLACK COLOR
D	CONTACT PIN	1	BRASS BAR	Ag20u",Ni50u"
C	SHUNT TERMINAL	1	BRASS 0.4t	Ag20u",Ni50u"
B	TIP SPRING	1	COPPER ALLOY 0.3t	Ag20u",Ni50u"
A	BODY	1	HIGHT TEMP.THERMOPLASTIC UL94V-0	BLACK COLOR

UNLESS OTHERWISE SPECIFED TOLERANCES

DECIMALS: X :±0.5 X.X :±0.3 X.XX :±0.2

ANGLES: X :±2° X.X :±1°

Singatron Enterprise Co., Ltd.
信音企業股份有限公司

TITLE	DC POWER JACK		
DWN		PART NO. 2DC-G028-B04	
CHKD		SCALE 4:1	UNIT: mm
APVD		SIZE: A3	SHEET: 1OF1	REV: F

CUSTOMER COPY

文件編號: ED-06-043-A