REV.	ECN NO OR DESCRIPTION	REVISED	DATE
C	ECN NO. 950143	DA	2006.04.27
D	ECN NO. T060242	JERRY	2006.10.14

SPECIFICATIONS:
1.RATING: DC 6.3V 2A.
2.CONTACT RESISTANCE: 30mΩ MAX.
3.INSULATION RESISTANCE: 100MΩ MIN. AT DC 500V.
4.DIELECTRIC STRENGTH: AC 500V FOR 1 MINUTE.
5.INSERTION FORCE: 2KG MAX.
WITHDRAWAL FORCE: 0.3KG–1.5KG.
6.LIFE: 5,000 CYCLES.
7.SOLDER HEAT RESISTANCE: WAVE SOLDERING 260℃ 10SECS.
8.TO CONFORM TO THE "SE–01–001" & "ROHS DIRECTIVE"
9.GREEN PRODUCT IDENTIFICATION MARK IN JACK: △
10.GREEN PRODUCT IDENTIFICATION LABEL IN PACKING: G.P. PASS
11.FOR LEAD–FREE PROCESS.
12.PACKING: TAPE & REEL.

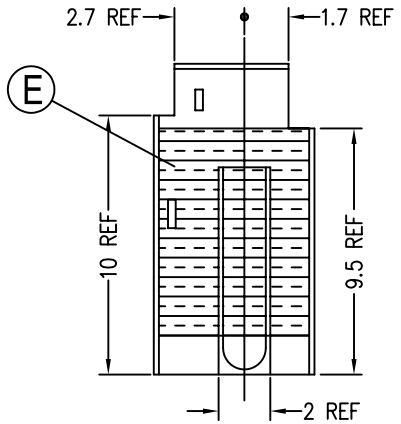

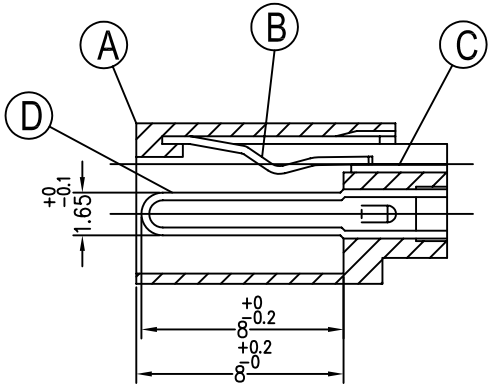

SECTION A–A

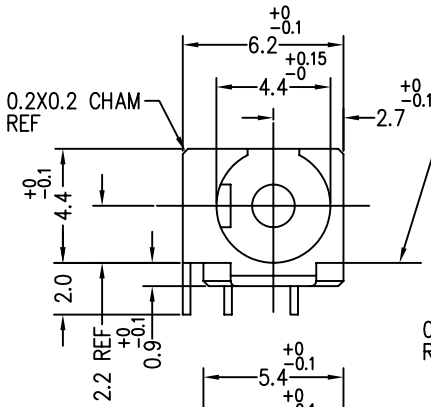

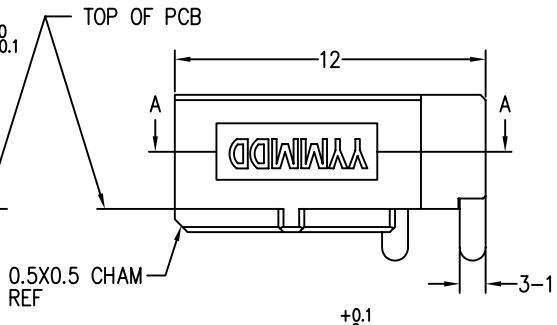

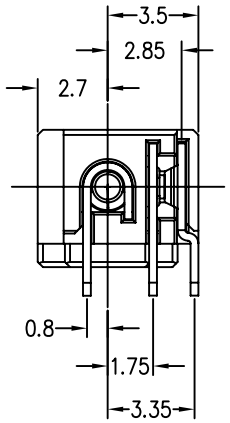

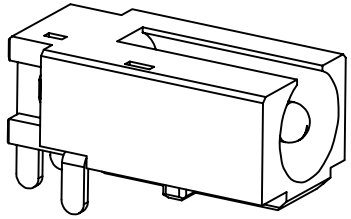

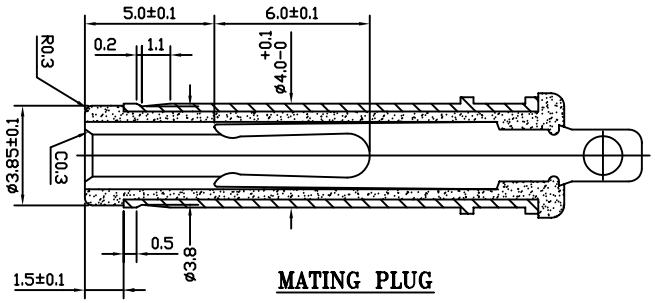

MATING PLUG

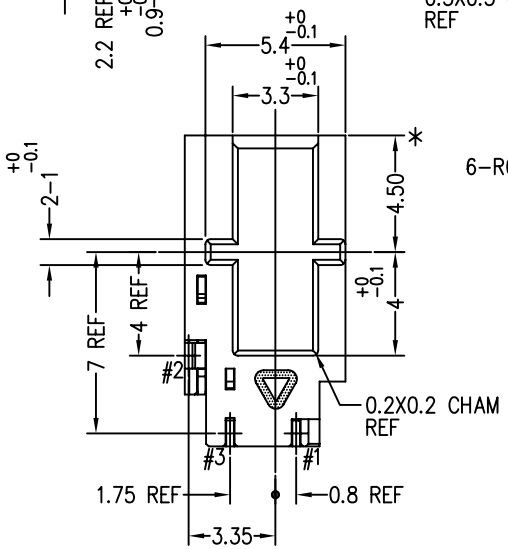

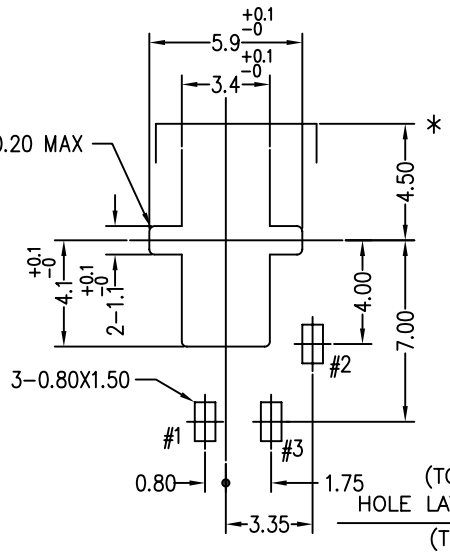

(TOLERANCE:±0.05)
HOLE LAYOUT(t0.6)(REF)
(TOP VIEW)

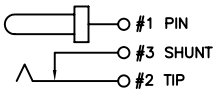

CIRCUIT

NO	DESCRIPTION	QTY	MATERIAL	PLATING & COLOR
E	INSULATION FILM	1	MYLAR 0.075t	TRANSPARENT
D	CONTACT PIN	1	BRASS 0.3t	GOLD FLASH
C	SHUNT TERMINAL	1	BRASS 0.3t	GOLD FLASH
B	TIP SPRING	1	BERYLLIUM 0.3t	GOLD FLASH
A	BODY	1	PA9T+30%GF UL 94V–0	BLACK COLOR

UNLESS OTHERWISE SPECIFED TOLERANCES

DECIMALS: X :±0.5, X.X :±0.3, X.XX :±0.2
ANGLES: X :±2°, X.X :±1°

Singatron Enterprise Co., Ltd.
信音企業股份有限公司

TITLE	DC POWER JACK		
DWN	JERRY 2006.10.14	PART NO. 2DC–0051–I01	
CHKD		SCALE:5/1	UNIT: mm
APVD	POCA 2006.10.14	SIZE: A3	SHEET: 1 OF 1
			REV: D

CUSTOMER COPY

文件編號 RD–06–035–1A